Neutron Filter Wiring

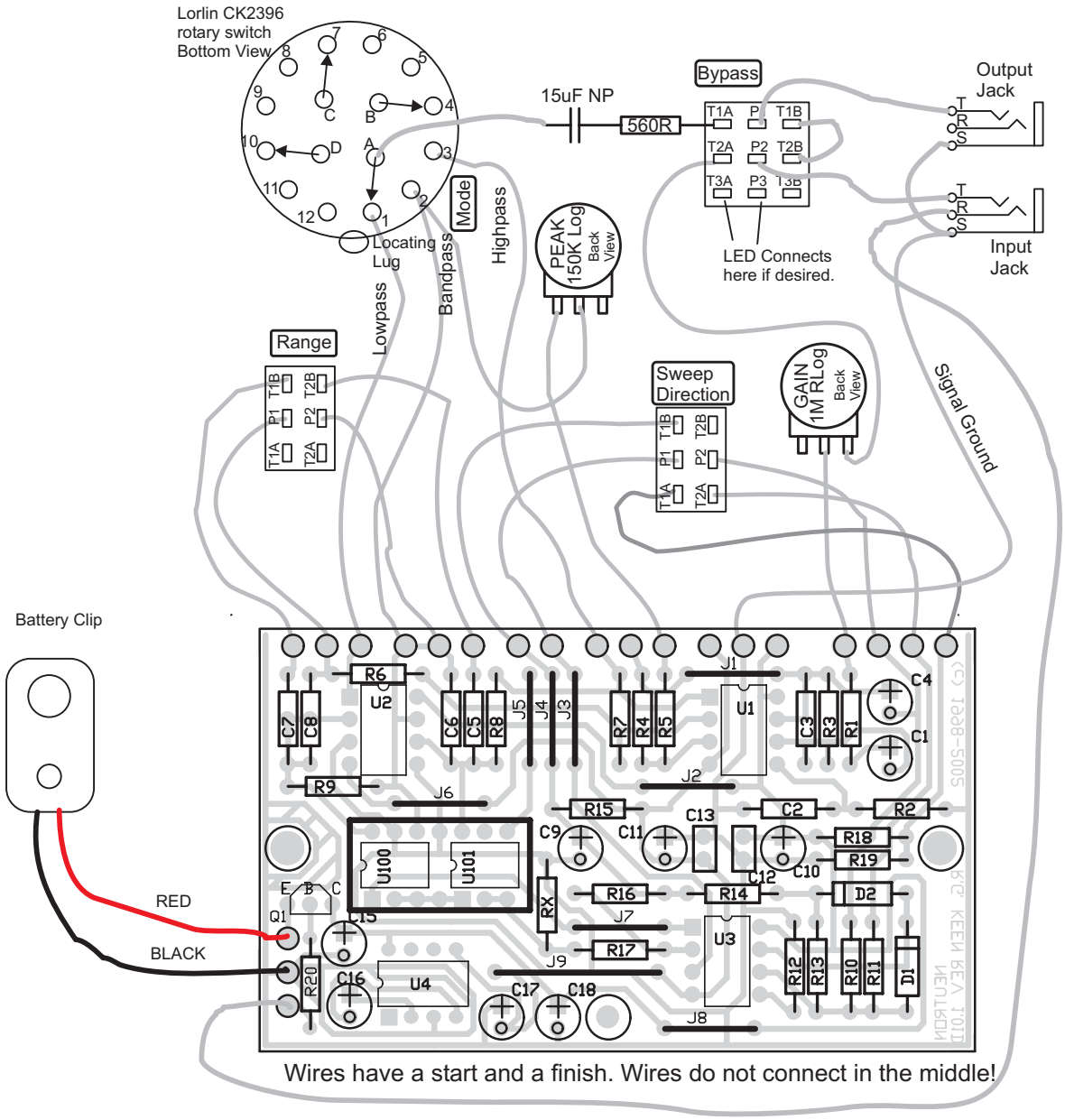

copyright 2000-2008 R.G. Keen. All rights reserved.